Restroom Partitions & ADA Compliance

The following information is provided as a summary of currently available data in the industry. It is *NOT* intended to be an interpretation of ADAAG, rather a reference for further research.

Reference Sources

- The American with Disabilities Act (ADA)
- ADA-ABA Accessibility Guidelines for Buildings and Facilities
- ANSI A117.1 – American National Standard for Buildings and Facilities
- UFAS – Uniform Federal Accessibility Standards

In order to make the ADAAG enforceable, these Guidelines were subsequently amended and adopted by the U.S. Department of Justice as the ADA Standards for Accessible Design (the *Standards*). Copies of the most updated Standards can be obtained from the Department of Justice and the Access Board in Washington, DC. The law applies to most buildings and facility types nationwide regardless of state or local requirements, but it is not a building code in and of itself.

Authority has been left with each state and local government to adopt and enforce its own building codes, but the office of the U.S. Assistant Attorney General for Civil Rights has the authority under the ADA to certify that a state or local building code meets or exceeds the minimum requirements of ADA, and such certificate of equivalency can be used as rebuttal evidence in any subsequent litigation. To help everyone with legal compliance, the federal government has established Disability and Business Technical Assistance Centers (DBTAC) in each region of the country to provide information and advice on the ADA, including ADAAG requirements.

All building plans should be confirmed with local jurisdictions to ensure job compliance.

ADA Title III requires that all new construction of public accommodations and commercial facilities meet or exceed ADAAG specifications. All additions, and substantial alterations to functional spaces in existing public accommodations and commercial facilities are considered new construction and subject to the same ADAAG requirements.

General Information

Doors

All interior doors (including toilet partition doors) must push or pull open with a maximum of five pounds of force. Door handles, pulls, latches, locks, and other opening devices should have a shape that is easy to operate with one hand, without tight grasping, pinching or twisting of the wrist; and they should be mounted no higher than 48" above the finish floor.

Toilets

"Undercut" bowls are preferred. The height of the toilet seat is perhaps the most critical factor. The height of toilet seats must be 17" to 19" above the finish floor. Moderate heights of 17" to 18" work well in standard compartments, while heights of 18" to 19" work best in the 36" wide walk-in compartments.

Grab Bars

All must have a diameter of 1¼" to 1½". Required mounting heights are 33" to 36" from the centerline of the grab bar to the finish floor. The structural strength of all grab bars and their mounting devices must withstand more than 250 lbf.

Standard compartments require one grab bar at least 40" long to be mounted on the side wall or partition nearest the toilet, no more than 12" from the back wall. A second grab bar at least 36" long must be mounted on the back wall, no more than 6" from the side wall or partition nearest the toilet.

Note: Local municipalities may have additional grab bar requirements.

Toe clearance at least 9" above the finish floor is required under the front partition and one side partition of all accessible compartments. Toe clearance is not required if the depth of the compartment is greater than 60".

Toilet Compartments

Standard Compartment (Wheelchair Accessible)

Required for all new construction and alterations with an outswinging door no more than 4" from the corner diagonally from the toilet. The toilet must be offset on the back wall with its centerline 18" from the nearest side wall or partition. Horizontal grab bars must be mounted behind the toilet and on the nearest side wall or partition. Refer to the illustration on page 2 for dimensions and more detailed information.

Stall Width

60" Minimum (Inside Clear)

Stall Depth

56" Minimum (Inside Clear) with wall-mounted toilets

59" Minimum (Inside Clear) with floor-mounted toilets

Standard Walk-In (36" Wide) Compartment

Ambulatory-accessible compartment with an outswinging door for washrooms with six or more toilets. The toilet must be centered on the back wall. Horizontal grab bars must be mounted on each side wall or partition. Refer to the illustration on page 2 for dimensions and more detailed information.

Note: Has unspecified clear opening for door size.

Stall Width

36" Minimum & Maximum (Inside Clear)

Stall Depth

60" Minimum (Inside Clear) required by ICC/ANSI A117.1

Verify all rough-in dimensions prior to installation.

Consult local and national codes. Conformity and compliance to local and national codes is the responsibility of the installer.

This information is subject to change without notice.

© 2015 Bradley

P.O. Box 309, Menomonee Falls, WI 53052-0309
800 BRADLEY (800 272 3539) +1 262 251 6000
bradleycorp.com

Restroom Partitions & ADA Compliance

Standard Compartment (Wheelchair Accessible)

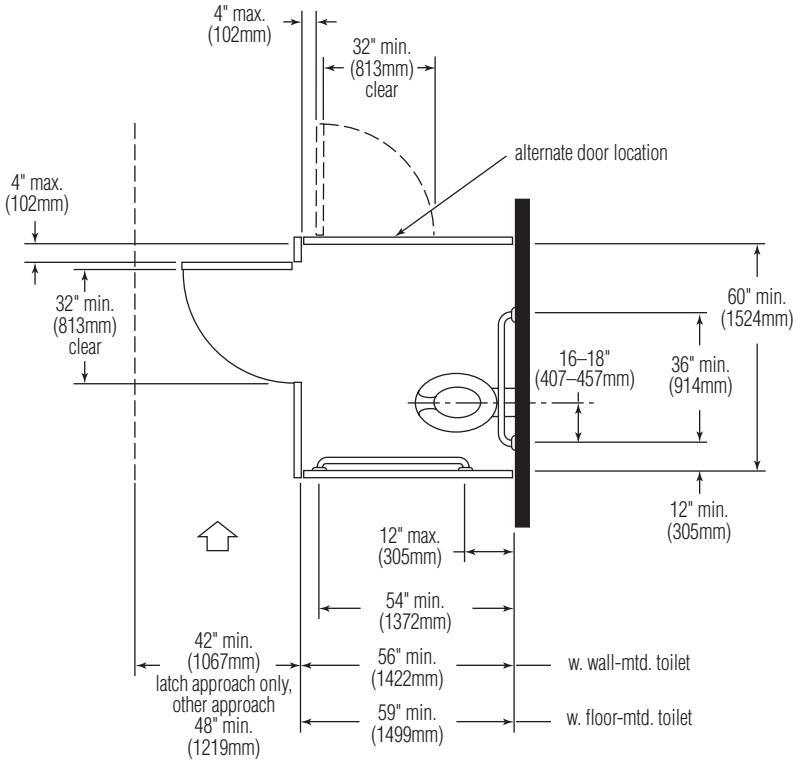

Standard Walk-In (36") Wide Compartment

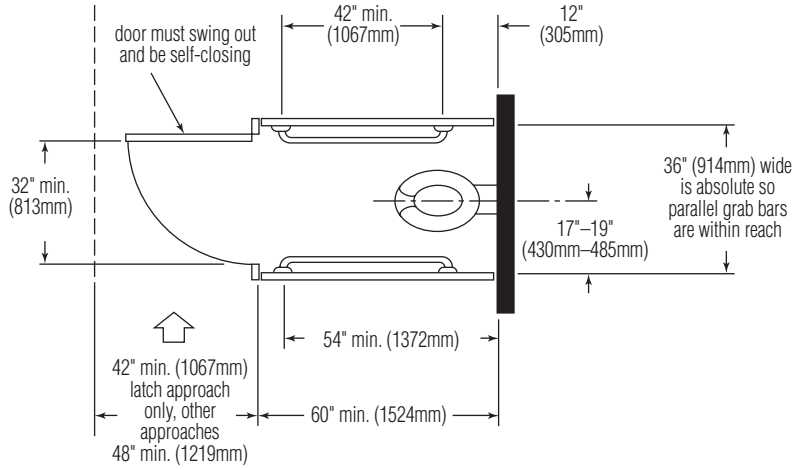

Verify all rough-in dimensions prior to installation.

Consult local and national codes. Conformity and compliance to local and national codes is the responsibility of the installer.

This information is subject to change without notice.

© 2015 Bradley

P.O. Box 309, Menomonee Falls, WI 53052-0309
800 BRADLEY (800 272 3539) +1 262 251 6000
bradleycorp.com