Installation Instructions

1-1/4 ON

1-1/4" Clean-out with No-Hub Connection

(S45-960)

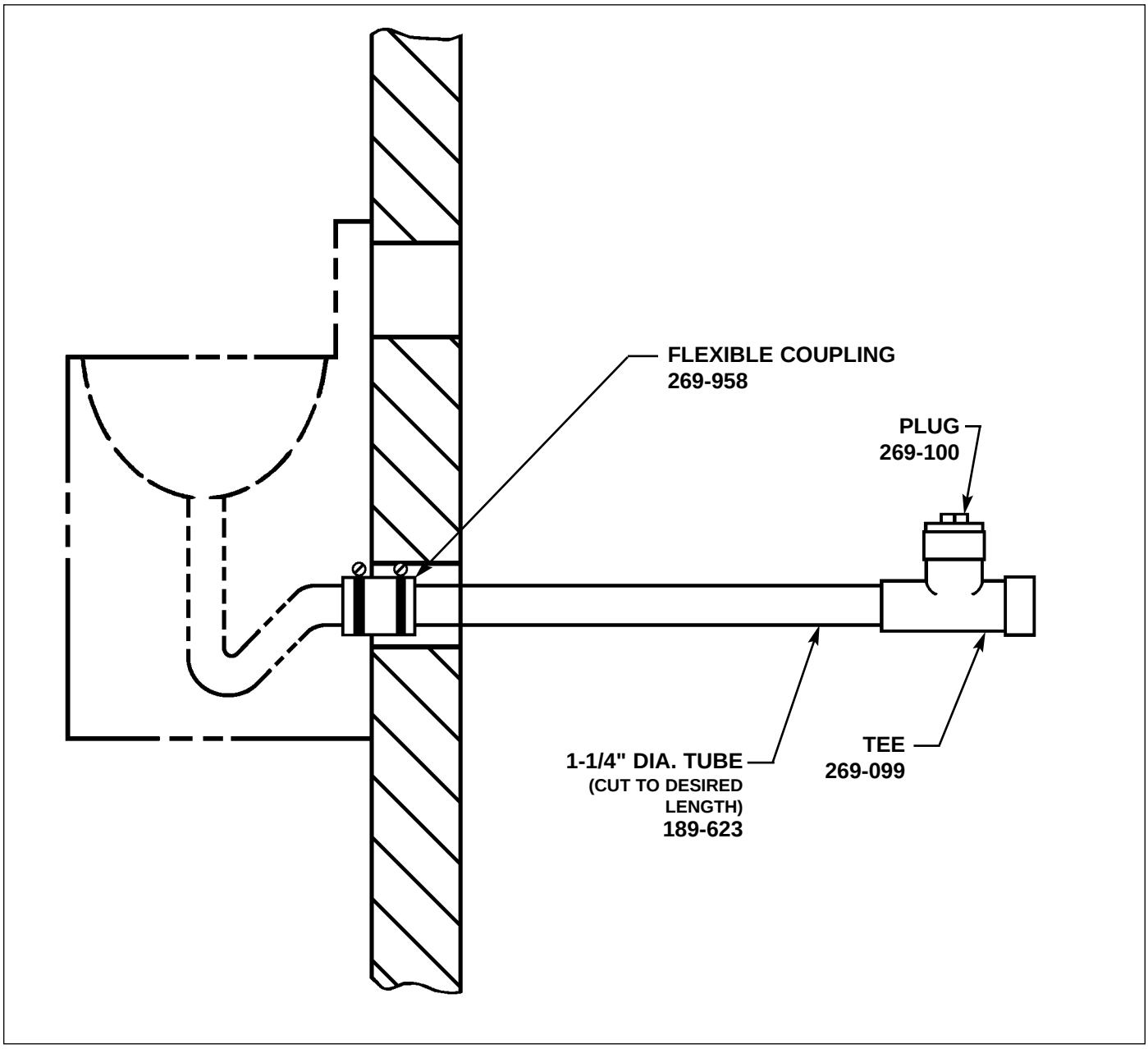

215-897 Rev. C; EN 04-710
© 2004 Bradley Corporation

P.O. Box 309, Menomonee Falls, Wi 53052-0309
TEL. 1-800-BRADLEY FAX 262-251-5817
http://www.bradleycorp.com