2905-2873

Aerix® Sensor-Operated Warm Air Hand Dryer

○ **2905-287300 — Standard (110–120 volt, 13.6 amps, 60 Hz –White) *Bradex*®**

○ **2905-2873CE — European Export (220–220 volt, 7 amps, 50 Hz – White) *Bradex*®**

✔ Recommended for low to mid traffic areas; not recommended for high vandal-prone areas.

Product Materials

Cover: 5⁄64" (1.9mm) thick steel one-piece cover with white epoxy coating. Cover fixed to the base with four Allen-head screws.

Motor: durable, maintenance-free shaded pole motor with safety thermostat and self-resetting thermal cut-off at 266ºF (130ºC). PP UL94-V0 with single inlet fan wheel.

Heating Element: waved wire NiCr 40 heating element that incorporates a self-resetting thermal cut-off at 158ºF (70ºC).

Electronic Control: two distances (15/25 cm) IR electronic detection sensor with zamak air outlet grill.

Base Plate: thermoplastic ABS UL 94-V0 base and single-inlet centrifugal scroll fan; with four Ø 5⁄16" (8 mm) holes for wall mounting.

Installation

Verify all rough-in dimensions prior to installation. Hand dryers require a dedicated circuit and must be properly grounded. GFI Circuit protection is recommended. One side of dryer should be mounted to a stud.

Operation

Place hands 3"–6" below air outlet grill to activate air flow. Dryer will stop two seconds after hands are removed from air flow.

Product Compliance

- G Mark (only applies to the 2905-2873CE model)
- UL electrical components

Guide Specification

Surface-mounted hand dryer shall be fabricated from one-piece 5⁄64" (1.9 mm) thick steel. Cover shall have a white epoxy coating. Back base shall be fire-resistant plastic ABS UL 94-V0. Dryer shall be fitted with an infrared electronic sensor, zamak air outlet grill and shaded pole motor with safety thermostat and self-resetting thermal cut-off at 266ºF (130ºC). Dryer shall operate at 60 dB while delivering 194 CFM of air at 125.6°F (52ºC) and 4,181 LFM during user-controlled drying cycle. Dryer shall have a total power of 1,640 W (2.2 Hp) with a consumption of 13.6A (2905-2873) or 7A (2905-2873CE).

Overall dimensions: 11⅞"H x 10 1⁄16"W x 5½"D (302 mm x 256 mm x 140 mm)

Weight: 9.8 lb (4,45 kg)

Orders composed of products indicated as ***Bradex***® will be available to ship in three days after receipt of order at the factory. There is no pricing penalty for this service from Bradley.

This information is subject to change without notice.

© 2024 Bradley

P.O. Box 309, Menomonee Falls, WI 53052-0309
800 BRADLEY (800 272 3539) +1 262 251 6000
bradleycorp.com

Product Specifications

Voltage:	2905-2873 — 110–120 V 2905-2873CE — 220–240 V)	Consumption:	2905-2873 — 13.6A 2905-2873CE — 7A
Motor:	1/5 HP (140W)	RPM:	3,300
Nominal power:	1,640 W (2.2 Hp)	Heating element:	1,500 W (2 Hp)
Effective airflow:	166 CFM	Nominal airflow:	194 CFM
Noise level at 79":	60 dB	Airspeed:	4,181 LFM
Frequency:	50/60 Hz	Insulation:	Grounding required
Temperature (at 4" distance / 70ºF):	125.6ºF (52ºC)	Certificates:	2905-2873 — UL 499/CSA C22.2 2905-2873CE — VDE GS/VDE EMC/CE GOST
Drying time:	38 seconds	Mounting:	Surface

Dimensions (mm)

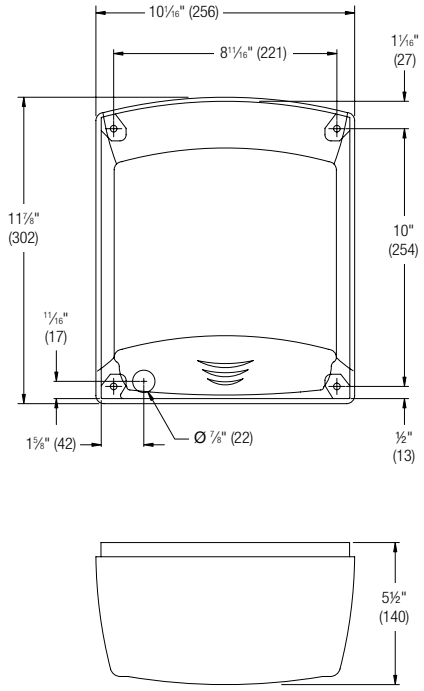

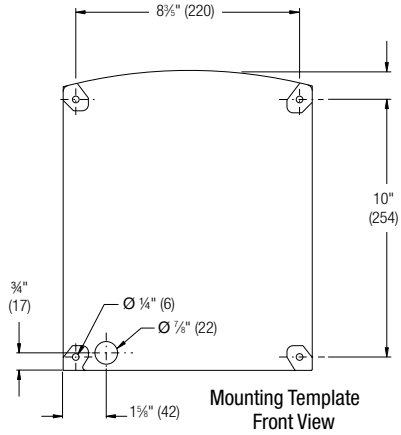

All dimensions ± 4%.

Orders composed of products indicated as **Bradex**® will be available to ship in three days after receipt of order at the factory. There is no pricing penalty for this service from Bradley.

This information is subject to change without notice.

© 2024 Bradley

P.O. Box 309, Menomonee Falls, WI 53052-0309
800 BRADLEY (800 272 3539) +1 262 251 6000
bradleycorp.com